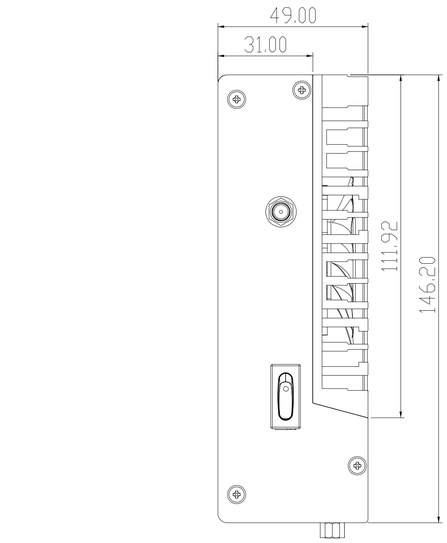

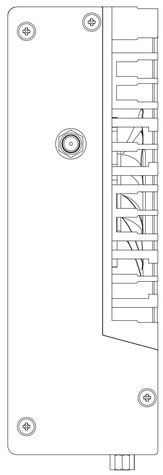

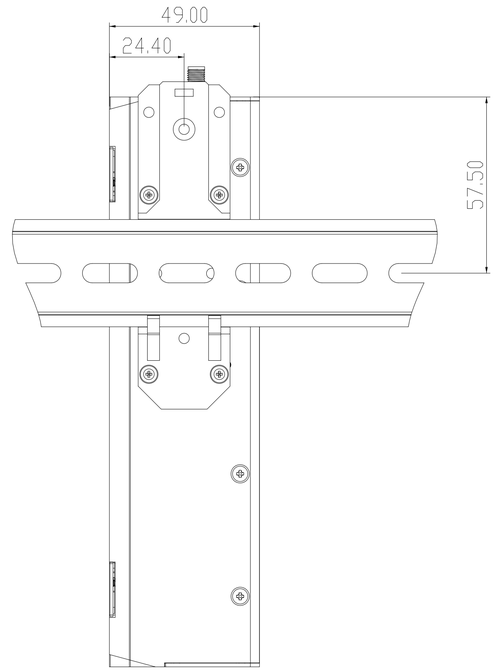

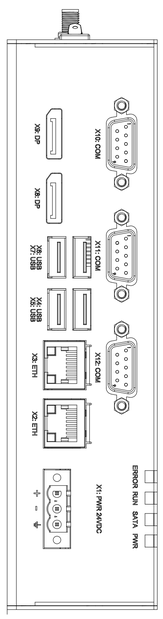

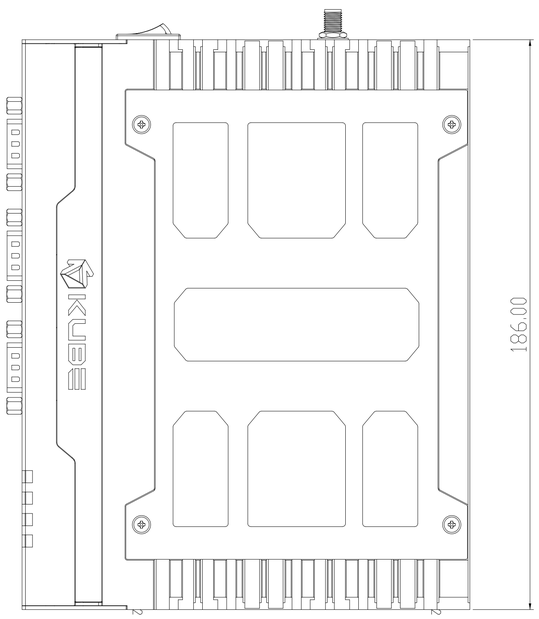

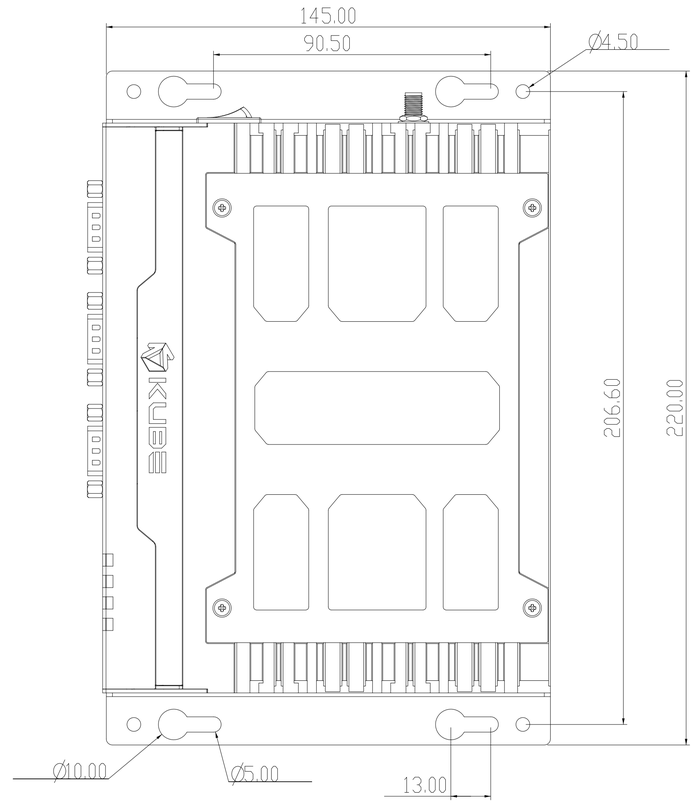

Ver:0

Mark	Description	Date	Sign

RANGE \ TOL±	CNC	鋁擠	壓鑄	塑膠射出	鈑金刀模	橡膠壓製	沖壓模具	NCT
0~6.99	0.2	0.35	0.4	0.2	0.3	0.2	0.2	0.3
7~30.99	0.25	0.4	0.5	0.3	0.4	0.3	0.2	0.3
37~80.99	0.3	0.45	0.6	0.4	0.5	0.4	0.2	0.3
81~180.99	0.35	0.5	0.7	0.5	0.6	0.8	0.25	0.35
181~315.99	0.45	0.6	0.9	0.8	0.8	1.2	0.3	0.4
316~800	0.5	0.8	1	1	1.2	1.5	0.4	0.5

TITLE	DIMENSION	DWG. NO.		DATE	08/06/2018
MODEL	KUBE-5500	PARTS NO.		Viewpoint	
MATERIAL		APPROVED.		SCALE	1=1
FINISH		DRAWN	Sammi_hsu	UNIT	mm.

A1